Representation of Financial Networks and Evaluation of Systemic Risk

by MARCO CORSI

Submission date: 15-Apr-2018 01:01PM (UTC+0100)
Submission ID: 86518773
File name: 101039_MARCO_CORSI_Representation_of_Financial_Networks_and_Evaluation_of_Systemic_Risk_442689_1812224343.pdf
Word count: 2494
Character count: 12606

MSc Project Proposal
Representation of Financial Networks and Evaluation of Systemic Risk

Marco Corsi
MSc Data Science

April 2018

1 Introduction

The 2008 financial crisis highlighted the deep interconnectivity amongst global financial institutions, as evidenced by the failure of Lehman Brothers and the resulting contagion wave that brought to the brink of default many large international banks. Although mass defaults were eventually avoided when the US Federal Reserve stepped in and provided an unprecedented amount of special emergency loans, the crisis brought to light more publicly the fragility of many financial conglomerates which until then had been widely considered well capitalised.

These events highlighted the importance of analysing the financial system as a "network in which the nodes are banks and the links represent their financial dependencies." This approach has been adopted by a recent stream of academic research which seeks to measure how the default of one institution will propagate across the system and to identify those banks which carry a high level of systemic risk (i.e. those banks whose failure could bring down the entire system).

The goal of this project is to: (1) select a model which describes financial networks as described above, (2) build a system that implements this model, and (3) thoroughly test and validate the new system against sample sets of the top N[1] largest global banking institutions. The system will generate a graphical representation of the network and calculate basic statistics describing the network structure. It will also implement a methodology to evaluate the systemic risk associated with each node (i.e., the impact that a default of that node would have on the overall structure). The system will be equipped with a simple graphical interface to run query answering and simulations over the model.

The main challenges presented by this project are: (1) the collection and organisation of the data required for the construction of the adjacent matrix and (2) the complexity of the mathematical model underpinning the calculation of the systemic risk.

[1] About 20 banks, but this number could be revised upwards or downwards depending on data availability.

2 Problem Description and Methodology

Given the set of the top N largest global banks, my intention is to model this system via a network where each node represents a bank and the links are an expression of their financial dependencies. The purpose of the model is twofold:

1. To visualise the the interconnectedness of the system and identify potential central players (see e.g. Figure 1).

2. To measure the systemic impact of each node on the overall network, i.e. to quantify how the financial distress (potentially the default) affecting that note will propagate through the system.

To complete my project, two main aspects will need to be addressed: (1) the modelling of the financial dependencies and (2) the choice of a methodology to measure the systemic impact of each node. Both these elements will be discussed in the following section.

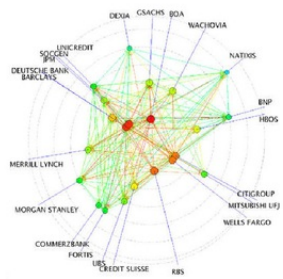

Figure 1: Example of visualisation of the banking network.

The image is taken from [2] and represents the structure of the banking network at the peak of the credit crisis, focusing on the institutions that borrowed the most from the US Federal Reserve. The linkages between nodes are based on mutual financial exposure between banks.

2.1 Models of financial dependency

When representing the financial system as a network where each bank is a node, the first challenge to address is how to model the dependencies. In other words, given two banks x and y, how do we measure the level of connectedness between them? Various approaches are possible (see e.g. [1], [7] and [6] for a full review):

1. The link between x and y is represented by the the number of common member sitting on the boards of the two banks.

2. The link between x and y is represented by the correlation of their stock price returns over a given period of time.

3. The link between x and y is represented by the direct financial exposure of x to y due to a direct investment (i.e. x holds equity or debt issued by y) or to overnight inter bank money lending.

The third approach is the most appropriate for our purpose, given that it measures the direct impact that the default of y (or more generally a decrease in its equity value) would have on the balance sheet of x. To clarify this point, let's remember that the value of the assets of a given company x is equal to the sum of its outstanding equity plus its liabilities [2]. In short:

$$A = E + L$$

where:

- A is the value of the company's assets, including any investment that the company may have done in stocks or bonds of another company y.
- E is the value of the company outstanding equity.
- L is the value of the company's liabilities (the money which is owned to the company creditors).

If x is invested in stocks or bonds issued by y, then when these securities lose value, the asset value of x experiences a loss of an amount proportional to the level of the exposure. If this exposure is large (i.e. if a significant proportion of x's balance sheet is invested in stocks or debt issued by y) then the subsequent loss could be significant and create relevant financial distress. If x's asset value falls below the value of x's liabilities, then a default occurs.

For the purpose of this project, the approach number 3 (plus its possible variations) will be used in order to determine the dependencies on a network. As this methodology relies on data related to financial exposures, we need to establish whether such information is available. The majority of these data is usually not disclosed for confidentiality reasons, but approximate solutions are possible:

1. In [2] and [3] the authors focus on a set of 21 global banks and model the financial dependency between x and y based on the percentage of company x which is owned by company y (and vice versa). This approach disregards information on interbank debt and uses equity ownership as the only measure of financial exposure. The reason for this simplification is that information on equity ownership is more easily accessible. The paper uses data from the Orbis database[3] as of 2007. Similar information can also be obtained from other sources such as Bloomberg[4] or Factsect[5] or directly from the balance sheet of the company.

2. More recently, in [5], the authors consider a large set of 180 European banks and for each one of them they manage to reconstruct the full financial exposure (debt plus equity) with respect to any other company

[2] See for example https://www.investopedia.com/terms/a/accounting-equation.asp
[3] https://www.bvdinfo.com/en-gb/our-products/data/international/orbis
[4] https://www.bloomberg.com/professional/
[5] https://www.factset.com/data/company-data

within the universe. Given the incompleteness of the data related to interbank debt (which is often reported as an aggregate for each bank, without providing a breakdown per counterparts), the authors also propose a methodology to approximate the debt exposure using the available data. Again, the primary source of information is the Orbis database.

This project will be following the approach highlighted in point 1 above, relying on all the aforementioned data sourced to construct the final dataset.

2.2 Measure the systemic impact

At least two different approaches can be followed to measure the systemic impact of a node on the overall network, i.e. to quantify how the financial distress (potentially the default) affecting that node propagates trough the system.

Cascade of defaults: when bank y defaults, then the asset value of company x will decrease by an amount proportional to its exposure to y. If the value of the assets falls below the value of the liabilities then x also is in default. This is the main model used by central banks to assess the sources of systemic risk; together with the advantage of simplicity it also presents a few drawbacks. The main one is that it is unable to describe situations where the default of y doesn't trigger a default of x but still weakens its financial position. This weakness can propagate through the system and increase its overall fragility. Defaults could also occur downstream albeit not in a sequential manner.

Debt Rank: this recent approach has been developed by a group of theoretical physicists and is presented in [2] and [3] , refined in [5] and led, in [4], to the implementation of a full-stress test environment in Matlab. The Debt Rank approach allows us to take into account the propagation of distress across the system and provides a measure of the total "value in the system which is affected by a node." This is done via the introduction of a function $h : V \times T \to [0, 1]$ that for a given node in the space of the nodes V measures the distress at a given point in time $t \in T \subset \mathbb{R}$ via a value between 0 (no distress) and 1 (default). The function h models the distress of a node i at time t as the sum of the distress of the same node at time $t - 1$ plus the the effect of the distress propagating from any other node connected to i. Crucially, this methodology covers the case of a feedback loop, where a node x induces distress on a node y which in turn induces more distress on x. To avoid infinite loops, the Debt Rank methodology cuts the number of these feedback iterations to one.

This project will be following the Debt Rank approach.

3 Project goal

The goal of this project it is to design and implement a system that describes the financial dependencies across the largest global banking institutions via a complex network structure. The network will be based on the methodological assumptions listed in Section 2 and will satisfy each of the following requirements:

1. Generate a graphical representation of the network.
2. Calculate basic statistics describing the network structure (e.g. average in and our degrees or link density).
3. Implement a methodology to evaluate the systemic risk associated with each node (i.e., the impact that a default of that node would have on the overall structure).

Finally, an implementation effort is planned to equip the analyser with a simple graphical interface to run query answering and simulations over the model.

4 Project structure, software and data

The system will be developed in Python using functionalities from the the package "Networkx" for graph analytics and visualisations.

In order to accomplish the objectives stated above, the project will be divided into four main components, to be executed in sequence. Each component is described in detail below:

4.1 Data gathering and organisation

This is the most critical aspect of the project. In respect of a given day (or period), the following information is needed in order to construct the model:

- List of the Top N largest global banks, based on their market capitalisation. Each institution shall be identified by its unique ISIN code, the name of the parent company (in the case of large conglomerates), its domicile, its primary listing (i.e. on which major exchange the company is listed). This information will be obtained from any of the following two sources: Bloomberg, S&P web site.
- For every bank in the list defined above, the percentage of its equity owned by any other bank in the same list. This information will allow me to model the financial dependency between the different components of the company universe. These data will be obtained from the following sources: company website, Bloomberg (whenever accessible), Factsect.

The information will be organised in a relational database.

4.2 Network construction

The first section of code will be constructed in order to accomplish the following tasks:

1. In respect of a given day (or period) and using the data gathered in the section above, generate the dependency matrix modelling the network.
2. Graphical visualisation of the network structure.
3. Calculate descriptive statistics such as average in and our degrees or link density.

4.3 Measure the Systemic Risk

The second section of code will be constructed in order to implement the algorithm for the calculation of the systemic risk associated with each node in the network.

The code will also generate a graphical visualisation of the results in a chart that identifies via proper colour coding the level of risk associated with each institution.

4.4 Network visualisation tool

Construct a simple visualisation tool that will act as a graphical user interface to run query answering and simulations over the model. Via the interface the user will be able to simulate the evolution of the network (and corresponding level of node distress) following the default of a selected node.

4.5 Additional deliverables

If time permits, the system developed above could be adapted to analyse different sets of data: a universe of financial and non financial stocks, where the dependency between company A and company B is not measured by the percentage of A owned by B (or vice versa) but by the percentage of revenues of A coming from transactions with B (or vice versa).

The diagram displayed in Figure 2 illustrate the overall structure of the system.

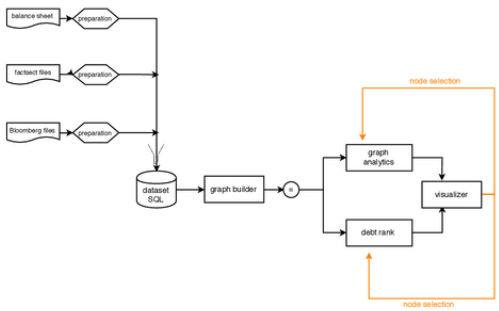

Figure 2: Project architecture

5 Timeline (preliminary)

The timeline for the execution of the project is as follows:

1. April-2018: complete the literature review and initiate data gathering.

2. May-2018: complete data gathering and organisation; implement data preparation function.

3. June-2018: develop all the functionalities for network construction.

4. July-2018: develop all the functionalities for the measurement of the Systemic Risk and build the graphical interface.

5. August-2018: analysis of the results and report drafting.

References

[1] Kleinberg J., Easley D. *Networks, Crowds, and Markets: Reasoning about a Highly Connected World*. Cambridge University Press (2010).

[2] Battiston S., Puliga M., Kaushik R., Tasca P. and Cardarelli G. *DebtRank: Too Central to fail? Financial Networks, the FED and Systemic Risk*. Nature, Scientific Reports 2, 541 (2012).

[3] Battiston S., Puliga M., Kaushik R., Tasca P. and Cardarelli G. *DebtRank: Too Central to fail? Financial Networks, the FED and Systemic Risk. Supplementary Information to Scientific Report 2, 541 (2012)*. Nature, Scientific Reports 2, 541 (2012).

[4] Battiston S., Caldarelli G., D'Errico M., Gurciullo S. *DebtRank: Leveraging the network: a stress test framework based on DebtRank*. Statistics & Risk Modelling (in press) (2016a).

[5] Bardoscia M., Battiston S., Caccioli F. and Caldarelli G. *DebtRank: A Microsopic Fundation for Shock Propagation*. PloS One, 10(6):e0130406 (2015a).

[6] Caldarelli G. *Scale-Free Networks*. Oxford University Press (2007).

[7] Caccioli F., Barucca P., Kobayashi T., *Network models of financial systemic risk: a review*. J Comput Soc Sc 1:81-114 (2018).